TAX

ASSESSMENT MAP

OF THE

BOROUGH OF LAKEHURST

IN THE

COUNTY OF OCEAN
NEW JERSEY

REMINGTON & VERNICK ENGINEERS

9 ALLEN STREET, TOMS RIVER, NJ 08753

(732) 286-9220, FAX (732) 505-8416, WEB SITE ADDRESS: WWW.RVE.COM

Certificate of Authorization: 24 GA 28003300

~ENGINEERING EXCELLENCE~

2020

KEY MAP

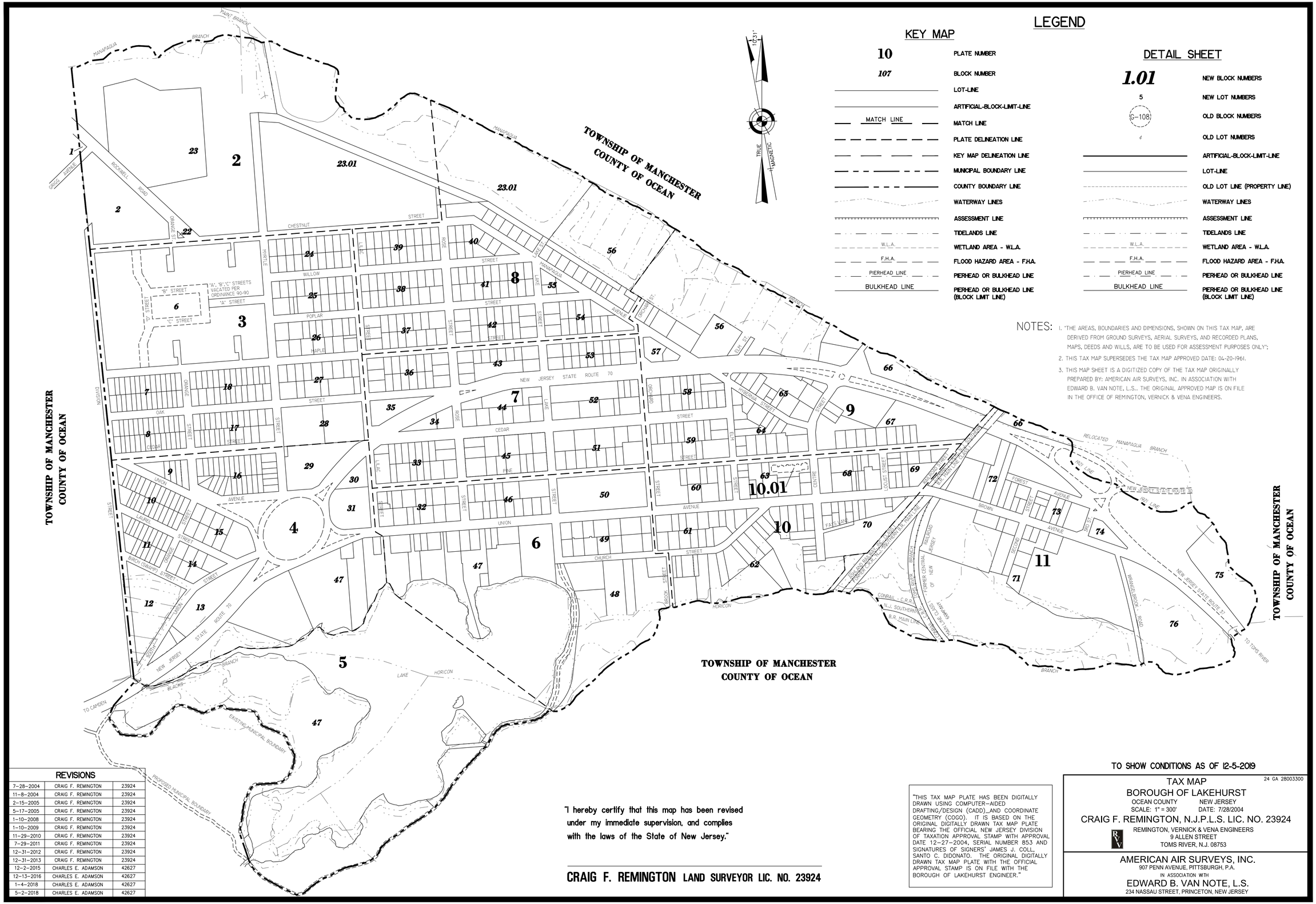

NOTES:

1. "THE AREAS, BOUNDARIES AND DIMENSIONS, SHOWN ON THIS TAX MAP, ARE DERIVED FROM GROUND SURVEYS, AERIAL SURVEYS, AND RECORDED PLANS, MAPS, DEEDS AND WILLS, ARE TO BE USED FOR ASSESSMENT PURPOSES ONLY";
2. THIS TAX MAP SUPERSEDES THE TAX MAP APPROVED DATE: 04-20-1961.
3. THIS MAP SHEET IS A DIGITIZED COPY OF THE TAX MAP ORIGINALLY PREPARED BY: AMERICAN AIR SURVEYS, INC. IN ASSOCIATION WITH EDWARD B. VAN NOTE, L.S.. THE ORIGINAL APPROVED MAP IS ON FILE IN THE OFFICE OF REMINGTON, VERNICK & VENA ENGINEERS.

REVISIONS

7-28-2004	CRAIG F. REMINGTON	23924
11-8-2004	CRAIG F. REMINGTON	23924
2-15-2005	CRAIG F. REMINGTON	23924
5-17-2005	CRAIG F. REMINGTON	23924
1-10-2008	CRAIG F. REMINGTON	23924
1-10-2009	CRAIG F. REMINGTON	23924
11-29-2010	CRAIG F. REMINGTON	23924
7-29-2011	CRAIG F. REMINGTON	23924
12-31-2012	CRAIG F. REMINGTON	23924
12-31-2013	CRAIG F. REMINGTON	23924
12-2-2015	CHARLES E. ADAMSON	42627
12-13-2016	CHARLES E. ADAMSON	42627
1-4-2018	CHARLES E. ADAMSON	42627
5-2-2018	CHARLES E. ADAMSON	42627

"I hereby certify that this map has been revised under my immediate supervision, and complies with the laws of the State of New Jersey."

CRAIG F. REMINGTON LAND SURVEYOR LIC. NO. 23924

"THIS TAX MAP PLATE HAS BEEN DIGITALLY DRAWN USING COMPUTER-AIDED DRAFTING/DESIGN (CADD)_AND COORDINATE GEOMETRY (COGO). IT IS BASED ON THE ORIGINAL DIGITALLY DRAWN TAX MAP PLATE BEARING THE OFFICIAL NEW JERSEY DIVISION OF TAXATION APPROVAL STAMP WITH APPROVAL DATE 12-27-2004, SERIAL NUMBER 853 AND SIGNATURES OF SIGNERS' JAMES J. COLL, SANTO C. DIDONATO. THE ORIGINAL DIGITALLY DRAWN TAX MAP PLATE WITH THE OFFICIAL APPROVAL STAMP IS ON FILE WITH THE BOROUGH OF LAKEHURST ENGINEER."

TO SHOW CONDITIONS AS OF 12-5-2019

24 GA 28003300

TAX MAP
BOROUGH OF LAKEHURST
OCEAN COUNTY NEW JERSEY
SCALE: 1" = 300' DATE: 7/28/2004
CRAIG F. REMINGTON, N.J.P.L.S. LIC. NO. 23924
REMINGTON, VERNICK & VENA ENGINEERS
9 ALLEN STREET
TOMS RIVER, N.J. 08753

AMERICAN AIR SURVEYS, INC.
907 PENN AVENUE, PITTSBURGH, P.A.
IN ASSOCIATION WITH
EDWARD B. VAN NOTE, L.S.
234 NASSAU STREET, PRINCETON, NEW JERSEY

KEY MAP

REVISED TO SHOW CONDITIONS	
AS OF	BY
1-10-86	GEORGE C. LISSENDEN, JR., P.E. & L.S. NO. 12946
12-31-87	GEORGE C. LISSENDEN, JR., P.E. & L.S. NO. 12946
12-31-88	GEORGE C. LISSENDEN JR., P.E. & L.S. NO. 12946
10-1-89	MALCOLM J. ROBINSON JR., L.S. NO. 24625
12-1-92	CRAIG F. REMINGTON, L.S. NO. 23924
12-27-96	JOHN W. MASSEY, L.S. NO. 27518
7-28-04	CRAIG F. REMINGTON, L.S. NO. 23924
11-8-04	CRAIG F. REMINGTON, L.S. NO. 23924

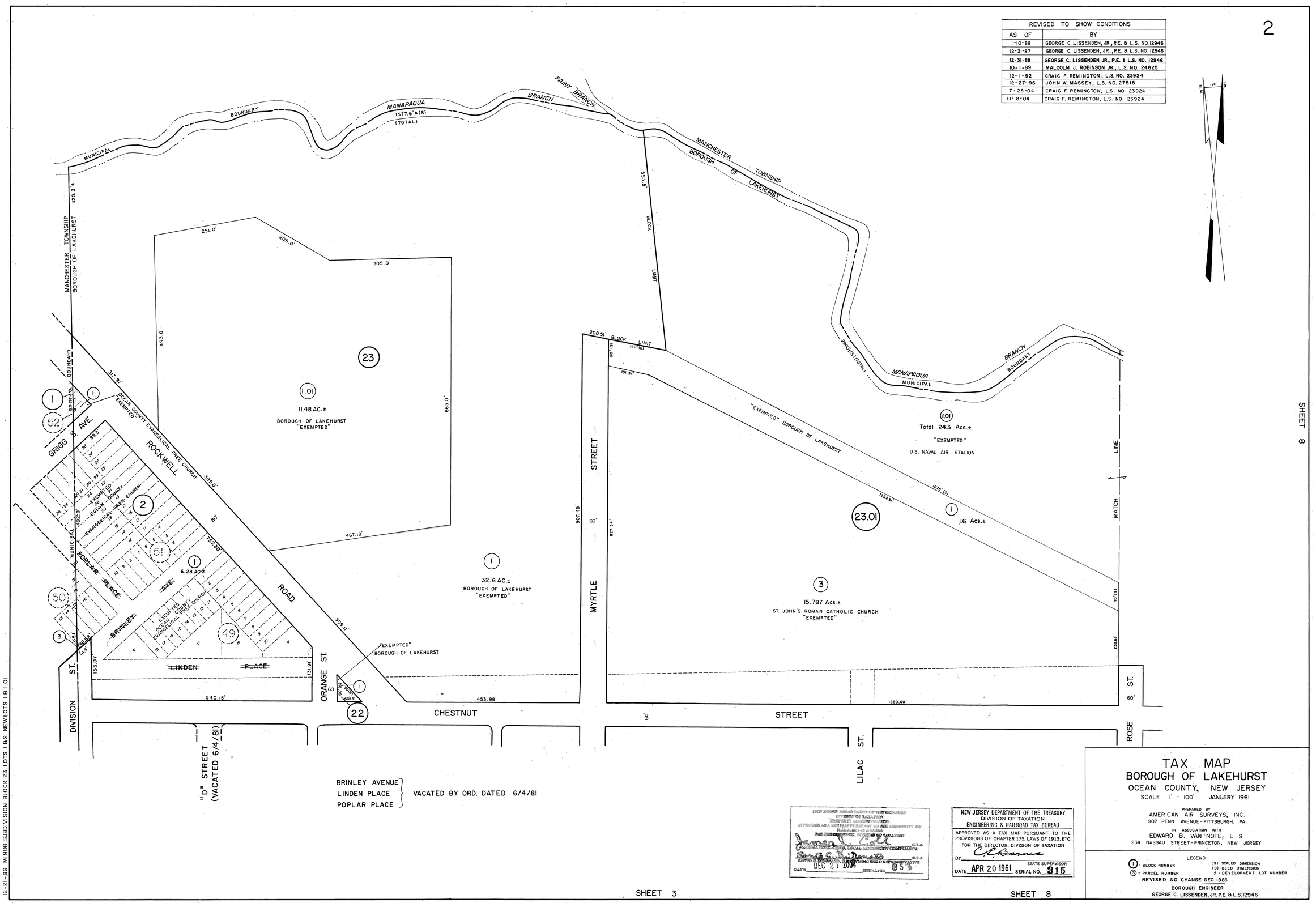

BRINLEY AVENUE
LINDEN PLACE
POPLAR PLACE
} VACATED BY ORD. DATED 6/4/81

NEW JERSEY DEPARTMENT OF THE TREASURY
DIVISION OF TAXATION
PROPERTY ADMINISTRATION
APPROVED AS A TAX MAP PURSUANT TO THE AUTHORITY OF
N.J.S.A. 54:1-35 & 54:4-23
FOR THE DIRECTOR, DIVISION OF TAXATION
C.T.A.
PROPERTY COMPLIANCE & LOCAL GOVERNMENT COMPLIANCE
C.T.A.
MATTO C. COMMISSIONER, OPERATING FIELD REPRESENTATIVE
DATE DEC 27 2004 SERIAL NO. 852

NEW JERSEY DEPARTMENT OF THE TREASURY
DIVISION OF TAXATION
ENGINEERING & RAILROAD TAX BUREAU
APPROVED AS A TAX MAP PURSUANT TO THE PROVISIONS OF CHAPTER 175, LAWS OF 1913, ETC.
FOR THE DIRECTOR, DIVISION OF TAXATION
BY C. Barnes
STATE SUPERVISOR
DATE APR 20 1961 SERIAL NO. 315

TAX MAP
BOROUGH OF LAKEHURST
OCEAN COUNTY, NEW JERSEY
SCALE 1" = 100' JANUARY 1961

PREPARED BY
AMERICAN AIR SURVEYS, INC.
907 PENN AVENUE-PITTSBURGH, PA.
IN ASSOCIATION WITH
EDWARD B. VAN NOTE, L. S.
234 NASSAU STREET-PRINCETON, NEW JERSEY

LEGEND
(1) - BLOCK NUMBER
(5) - PARCEL NUMBER
(S) SCALED DIMENSION
(D)-DEED DIMENSION
Z - DEVELOPMENT LOT NUMBER

REVISED NO CHANGE DEC 1983
BOROUGH ENGINEER
GEORGE C. LISSENDEN, JR. P.E. & L.S. 12946

12-21-99 MINOR SUBDIVISION BLOCK 23 LOTS 1 & 2 NEW LOTS 1 & 1.01

SHEET 3
SHEET 8

REVISED TO SHOW CONDITIONS	
AS OF	BY
1-10-86	GEORGE C. LISSENDEN, JR., P.E. & L.S. NO. 12946
12-31-87	GEORGE C. LISSENDEN, JR., P.E. & L.S. Nº 12946
12-31-88	GEORGE C. LISSENDEN JR., P.E. & L.S. NO. 12946
10-1-89	MALCOLM J. ROBINSON JR., L.S. NO. 24625
10-30-90	MALCOLM J. ROBINSON JR., L.S. NO. 24625
12-1-92	CRAIG F. REMINGTON, L.S. NO. 23924
7-28-04	CRAIG F. REMINGTON, L.S. NO. 23924
11-8-04	CRAIG F. REMINGTON, L.S. NO. 23924
12-2-2015	CHARLES E. ADAMSON, L.S. NO. 42627

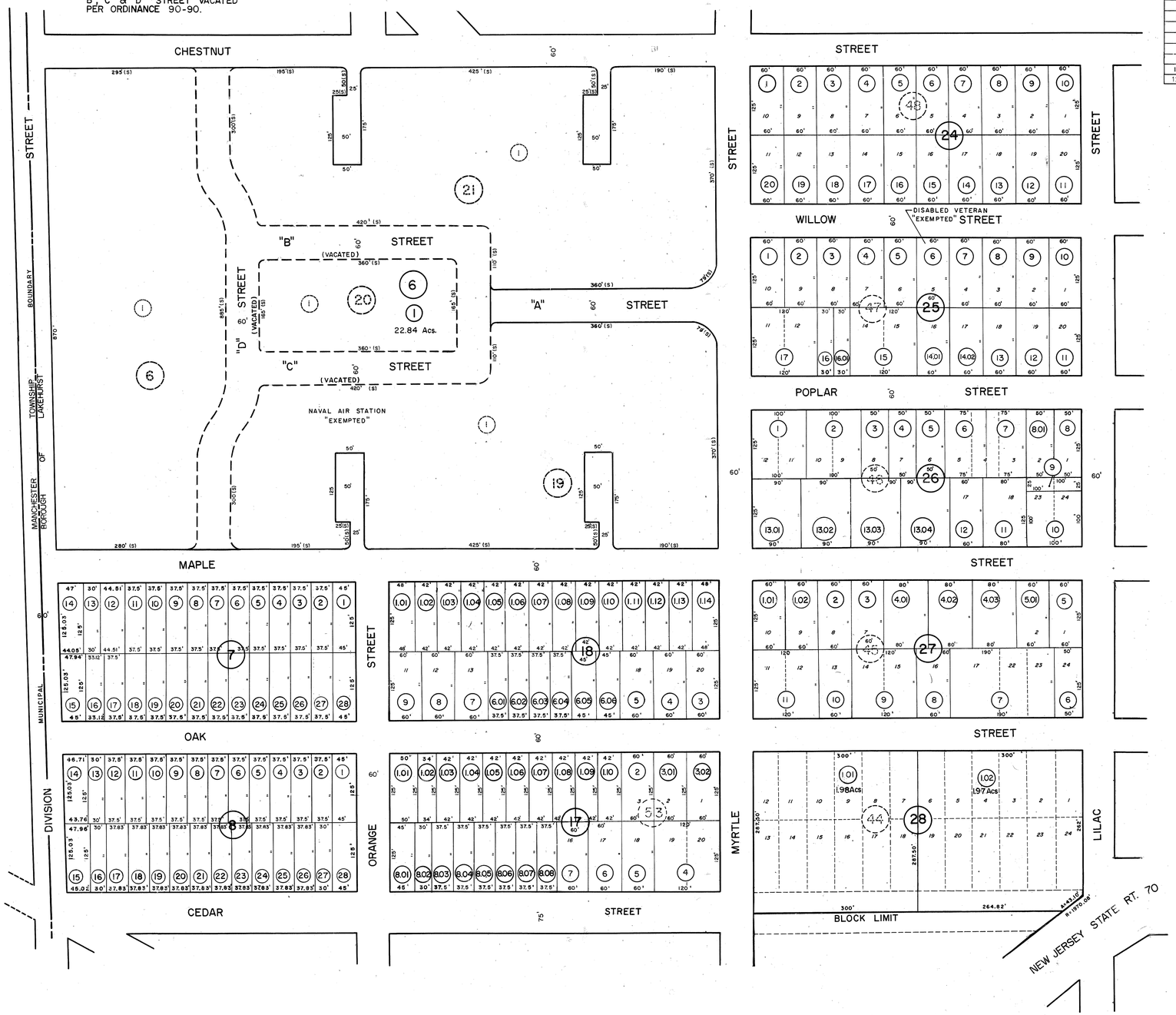

NEW JERSEY DEPARTMENT OF THE TREASURY
DIVISION OF TAXATION
PROPERTY ADMINISTRATION
APPROVED AS A TAX MAP PURSUANT TO THE AUTHORITY OF
N.J.S.A. 54:1-35 & 54:4-1
FOR THE DIRECTOR, DIVISION OF TAXATION
C.T.A.
MANAGER, LOCAL ASSESSMENT COMPLIANCE
C.T.A.
STATE SUPERVISOR, MAPPING FIELD REPRESENTATIVE
DATE DEC 27 2004 SERIAL NO. 853

NEW JERSEY DEPARTMENT OF THE TREASURY
DIVISION OF TAXATION
ENGINEERING & RAILROAD TAX BUREAU
APPROVED AS A TAX MAP PURSUANT TO THE PROVISIONS OF CHAPTER 175, LAWS OF 1913, ETC.
FOR THE DIRECTOR, DIVISION OF TAXATION
BY C.R. Barnes
STATE SUPERVISOR
DATE APR 20 1961 SERIAL NO. 315

TAX MAP
BOROUGH OF LAKEHURST
OCEAN COUNTY, NEW JERSEY

SCALE 1" = 100' JANUARY 1961

PREPARED BY
AMERICAN AIR SURVEYS, INC.
907 PENN AVENUE - PITTSBURGH, PA.
IN ASSOCIATION WITH
EDWARD B. VAN NOTE, L. S.
234 NASSAU STREET - PRINCETON, NEW JERSEY

LEGEND
(1) - BLOCK NUMBER
(5) - PARCEL NUMBER
(S) SCALED DIMENSION
(D) - DEED DIMENSION
5 - DEVELOPMENT LOT NUMBER

REVISED DEC. 1983

BOROUGH ENGINEER
GEORGE C. LISSENDEN, JR. P.E. & L.S. 12946

SHEET 3

REVISED TO SHOW CONDITIONS	
AS OF	BY
1-10-86	GEORGE C. LISSENDEN, JR, P.E. & L.S. NO. 12946
12-31-87	GEORGE C. LISSENDEN JR., P.E. & L.S NO. 12946
12-31-88	GEORGE C. LISSENDEN JR., P.E. & L.S. NO. 12946
12-1-92	CRAIG F. REMINGTON L.S. NO. 23924
12-27-96	JOHN W. MASSEY, L.S. NO. 27518
7-28-04	CRAIG F. REMINGTON, L.S. NO. 23924
11-8-04	CRAIG F. REMINGTON, L.S. NO. 23924
7-29-2011	CRAIG F. REMINGTON, L.S. NO. 23924

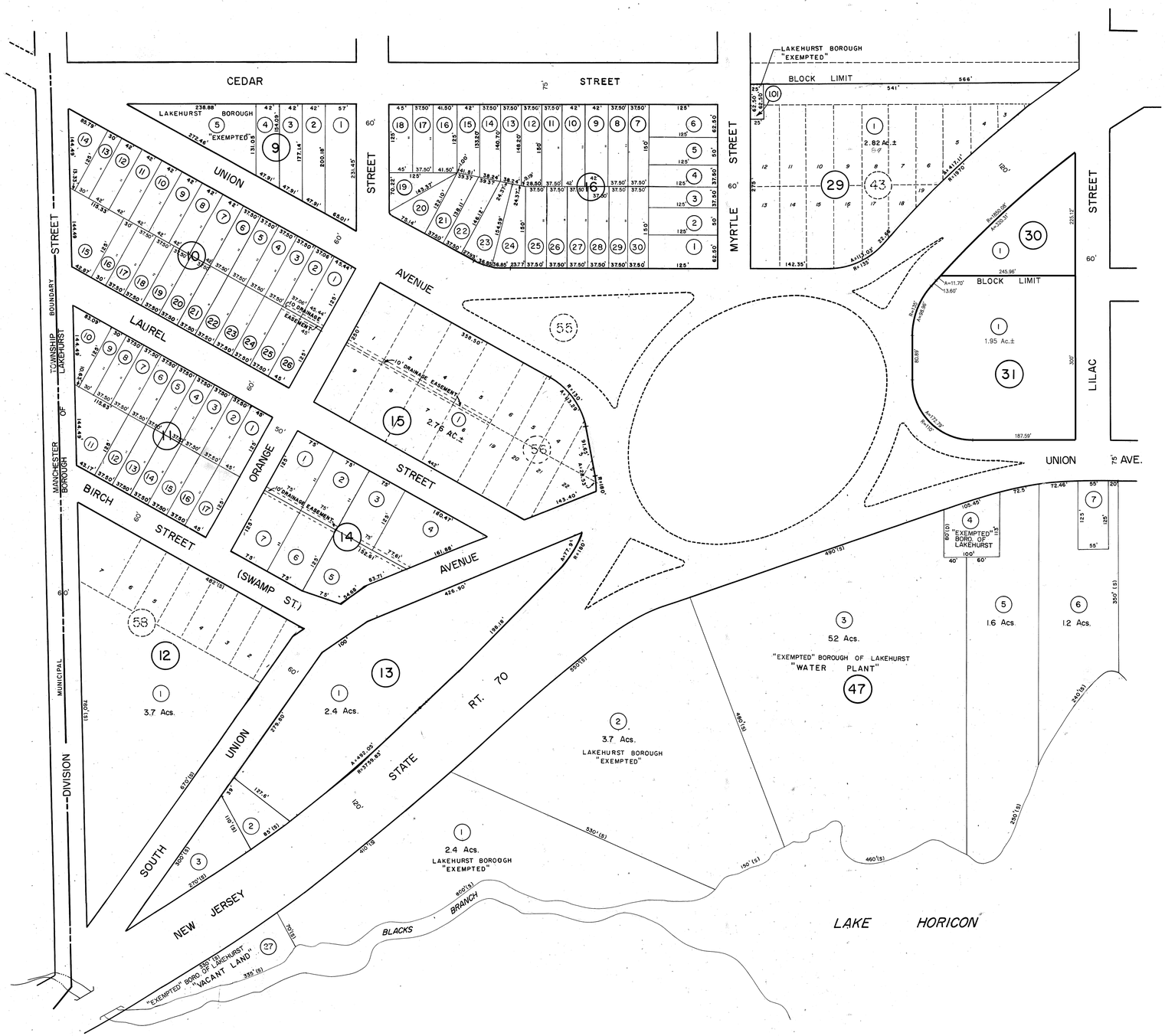

SHEET 7

SHEET 6

SHEET 5

NEW JERSEY DEPARTMENT OF THE TREASURY
DIVISION OF TAXATION
PROPERTY ADMINISTRATION
APPROVED AS A TAX MAP PURSUANT TO THE AUTHORITY OF N.J.S.A. 54:4-23 ET SEQ.
FOR THE DIRECTOR, DIVISION OF TAXATION
C.T.A.
C.T.A.
DATE DEC 27 2004 SERIAL NO. 853

NEW JERSEY DEPARTMENT OF THE TREASURY
DIVISION OF TAXATION
ENGINEERING & RAILROAD TAX BUREAU
APPROVED AS A TAX MAP PURSUANT TO THE PROVISIONS OF CHAPTER 175, LAWS OF 1913, ETC.
FOR THE DIRECTOR, DIVISION OF TAXATION
BY C. K. Barnes
STATE SUPERVISOR
DATE APR 20 1961 SERIAL NO. 315

TAX MAP
BOROUGH OF LAKEHURST
OCEAN COUNTY, NEW JERSEY

SCALE 1" = 100' JANUARY 1961

PREPARED BY
AMERICAN AIR SURVEYS, INC.
907 PENN AVENUE - PITTSBURGH, PA.
IN ASSOCIATION WITH
EDWARD B. VAN NOTE, L. S.
234 NASSAU STREET - PRINCETON, NEW JERSEY

LEGEND
(1) - BLOCK NUMBER
(5) - PARCEL NUMBER
(S) SCALED DIMENSION
(D) - DEED DIMENSION
5 - DEVELOPMENT LOT NUMBER

REVISED NO CHANGE - DEC. 1983

BOROUGH ENGINEER
GEORGE C. LISSENDEN, JR. P.E. & L.S. 12946

SHEET 4

REVISED TO SHOW CONDITIONS	
AS OF	BY
1-10-86	GEORGE C. LISSENDEN, JR., P.E. & L.S. NO. 12946
12-31-87	GEORGE C. LISSENDEN JR., P.E. & L.S. Nº 12946
12-31-88	GEORGE C. LISSENDEN JR., P.E. & L.S. NO. 12946
12-1-92	CRAIG F. REMINGTON, L.S. NO. 23924
7-28-04	CRAIG F. REMINGTON, L.S. NO. 23924
11-8-04	CRAIG F. REMINGTON, L.S. NO. 23924

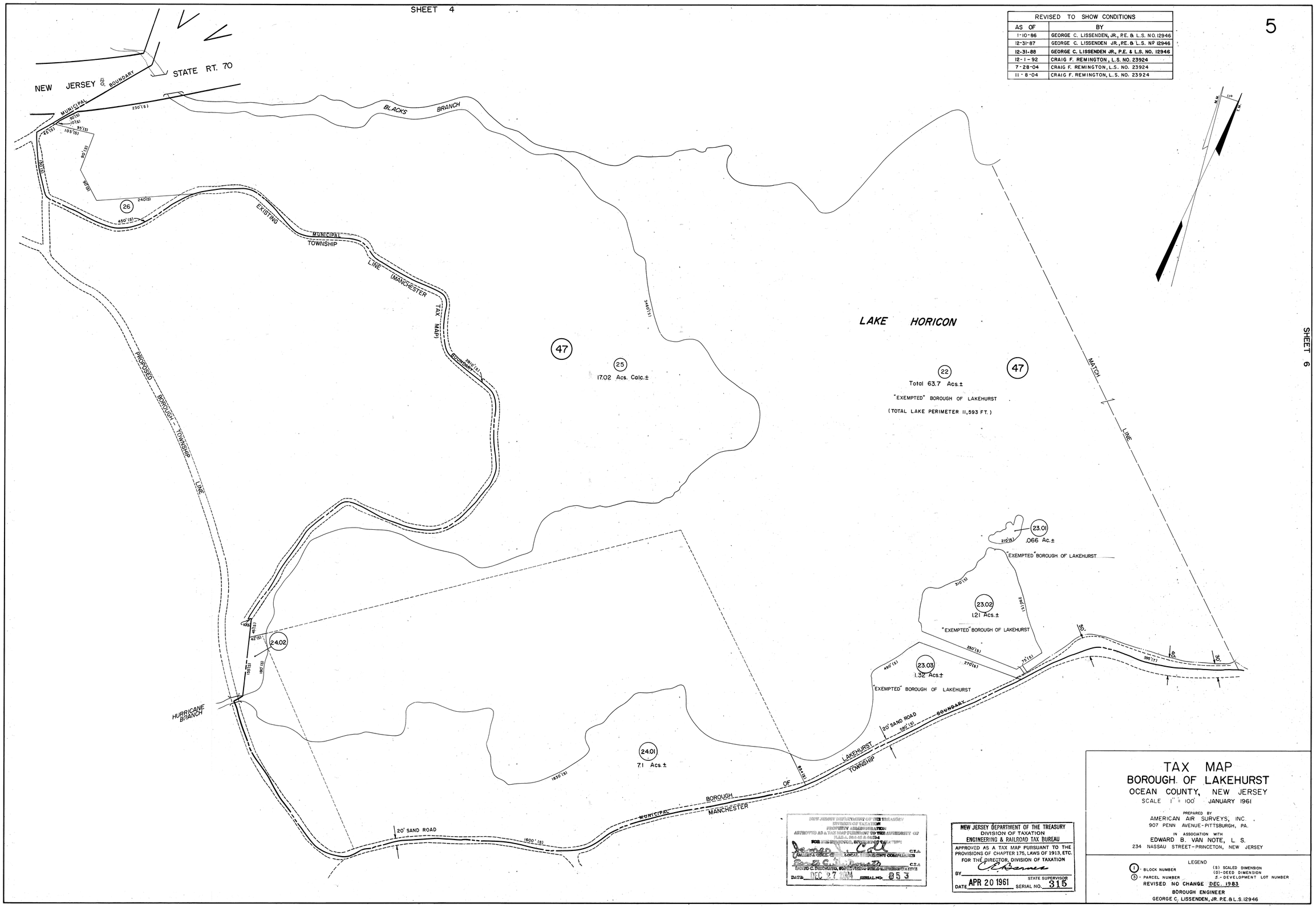

SHEET 6

TAX MAP
BOROUGH OF LAKEHURST
OCEAN COUNTY, NEW JERSEY
SCALE 1" = 100' JANUARY 1961

PREPARED BY
AMERICAN AIR SURVEYS, INC.
907 PENN AVENUE - PITTSBURGH, PA.
IN ASSOCIATION WITH
EDWARD B. VAN NOTE, L. S.
234 NASSAU STREET - PRINCETON, NEW JERSEY

LEGEND
(1) - BLOCK NUMBER
(3) - PARCEL NUMBER
(S) SCALED DIMENSION
(D) - DEED DIMENSION
5 - DEVELOPMENT LOT NUMBER

REVISED NO CHANGE DEC. 1983
BOROUGH ENGINEER
GEORGE C. LISSENDEN, JR. P.E. & L.S. 12946

NEW JERSEY DEPARTMENT OF THE TREASURY
DIVISION OF TAXATION
PROPERTY ADMINISTRATION
APPROVED AS A TAX MAP PURSUANT TO THE AUTHORITY OF
N.J.S.A. 54:1-35 & 54:4-23
FOR THE DIRECTOR, DIVISION OF TAXATION
C.T.A.
LOCAL PROPERTY COMPLIANCE
C.T.A.
SENIOR PROPERTY ADMINISTRATIVE REPRESENTATIVE
DATE DEC 27 1984 SERIAL NO. 853

NEW JERSEY DEPARTMENT OF THE TREASURY
DIVISION OF TAXATION
ENGINEERING & RAILROAD TAX BUREAU
APPROVED AS A TAX MAP PURSUANT TO THE PROVISIONS OF CHAPTER 175, LAWS OF 1913, ETC.
FOR THE DIRECTOR, DIVISION OF TAXATION
BY C. Barnes
STATE SUPERVISOR
DATE APR 20 1961 SERIAL NO. 315

SHEET 7

SHEET 4

SHEET 5

SHEET 10

REVISED TO SHOW CONDITIONS	
AS OF	BY
1-10-86	GEORGE C. LISSENDEN, JR., P.E. & L.S. NO. 12946
12-31-87	GEORGE C. LISSENDEN JR.,P.E. & L.S. Nº 12946
11-16-88	GEORGE C. LISSENDEN JR., P.E. & L.S. NO. 12946
12-31-88	GEORGE C. LISSENDEN JR. P.E. & L.S. NO. 12946
10-30-90	MALCOLM J. ROBINSON JR., L.S. NO. 24625
12-1-92	CRAIG F. REMINGTON, L.S. NO. 23924
7-28-04	CRAIG F. REMINGTON, L.S. NO. 23924
11-8-04	CRAIG F. REMINGTON, L.S. NO. 23924
1-10-09	CRAIG F. REMINGTON, L.S. NO. 23924
12-2-2015	CHARLES E. ADAMSON, L.S. NO. 42627
1-4-2018	CHARLES E. ADAMSON, L.S. NO. 42627
5-2-2018	CHARLES E. ADAMSON, L.S. NO. 42627
12-5-2019	CHARLES E. ADAMSON, L.S. NO. 42627

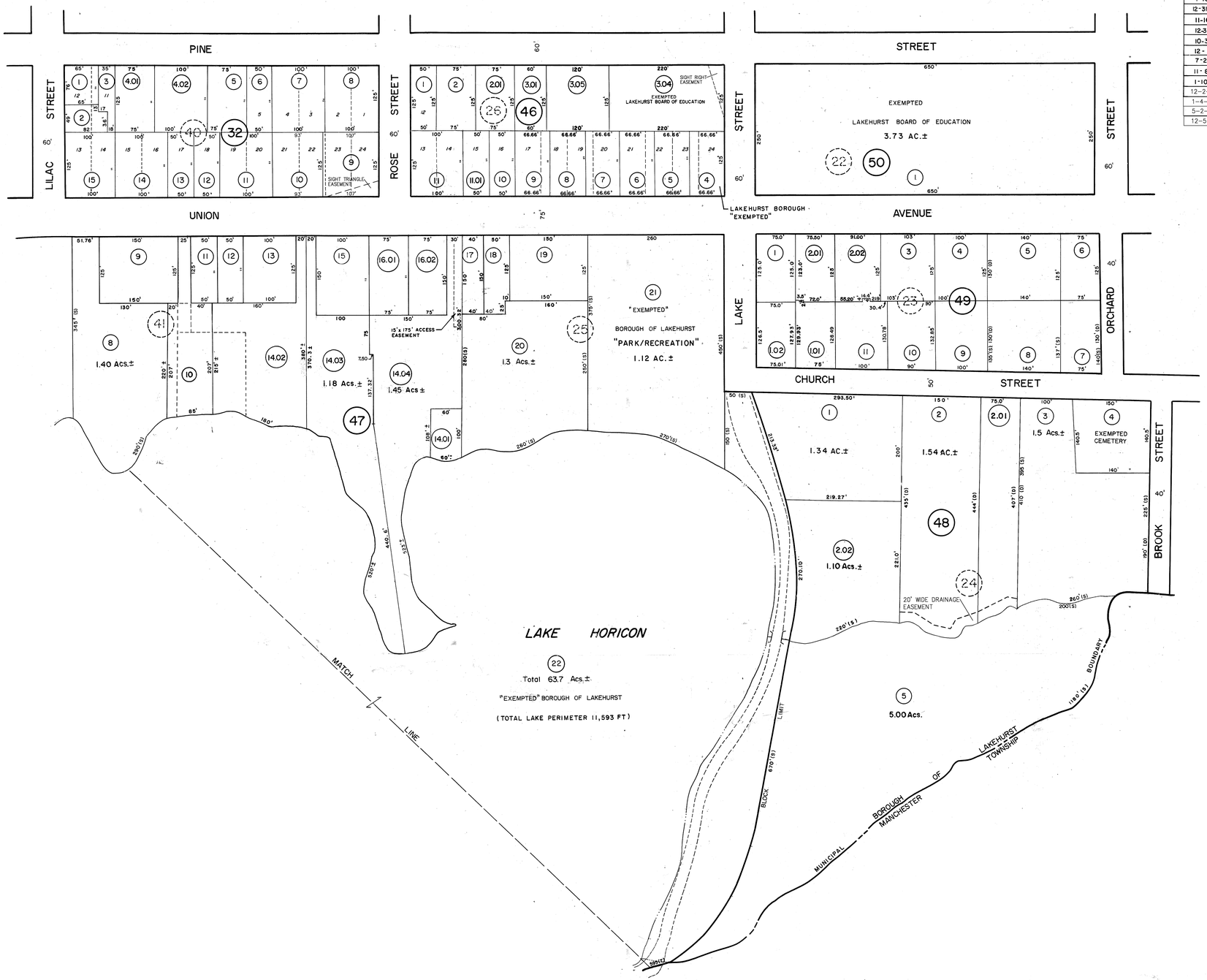

NEW JERSEY DEPARTMENT OF THE TREASURY
DIVISION OF TAXATION
PROPERTY ADMINISTRATION
APPROVED AS A TAX MAP PURSUANT TO THE AUTHORITY OF N.J.S.A. 54:4-23 & 54:4-24
FOR THE DIRECTOR, DIVISION OF TAXATION
C.T.A.
DAVID C. DREDGE, PROPERTY ADMINISTRATOR
C.T.A.
DAVID C. DREDGE, PROPERTY ADMINISTRATOR & REPRESENTATIVE
DATE DEC 27 2004 SERIAL NO. 653

NEW JERSEY DEPARTMENT OF THE TREASURY
DIVISION OF TAXATION
ENGINEERING & RAILROAD TAX BUREAU
APPROVED AS A TAX MAP PURSUANT TO THE PROVISIONS OF CHAPTER 175, LAWS OF 1913, ETC.
FOR THE DIRECTOR, DIVISION OF TAXATION
BY C. E. Barnes
STATE SUPERVISOR
DATE APR 20 1961 SERIAL NO. 315

TAX MAP
BOROUGH OF LAKEHURST
OCEAN COUNTY, NEW JERSEY
SCALE 1" = 100' JANUARY 1961

PREPARED BY
AMERICAN AIR SURVEYS, INC.
907 PENN AVENUE-PITTSBURGH, PA.
IN ASSOCIATION WITH
EDWARD B. VAN NOTE, L. S.
234 NASSAU STREET-PRINCETON, NEW JERSEY

LEGEND
(1) - BLOCK NUMBER
(5) - PARCEL NUMBER
(S) SCALED DIMENSION
(D)-DEED DIMENSION
5 - DEVELOPMENT LOT NUMBER

REVISED DEC. 1983
BOROUGH ENGINEER
GEORGE C. LISSENDEN, JR. P.E. & L.S. 12946

SHEET 8

REVISED TO SHOW CONDITIONS	
AS OF	BY
1-10-86	GEORGE C. LISSENDEN, JR., P.E. & L.S. NO.12946
12-24-86	GEORGE C. LISSENDEN, JR., P.E. & L.S. NO.12946
12-31-87	GEORGE C. LISSENDEN JR., P.E. & L.S. Nº 12946
11-16-88	GEORGE C. LISSENDEN JR., P.E. & L.S. NO. 12946
12-31-88	GEORGE C. LISSENDEN JR., P.E. & L.S. NO. 12946
12-18-91	MALCOLM J. ROBINSON JR., L.S. No. 24625
12-1-92	CRAIG F. REMINGTON, L.S. NO. 23924
12-24-01	CRAIG F. REMINGTON, L.S. NO. 23924
7-28-04	CRAIG F. REMINGTON, L.S. NO. 23924
11-8-04	CRAIG F. REMINGTON, L.S. NO. 23924
12-13-2016	CHARLES E. ADAMSON, L.S. NO. 42627

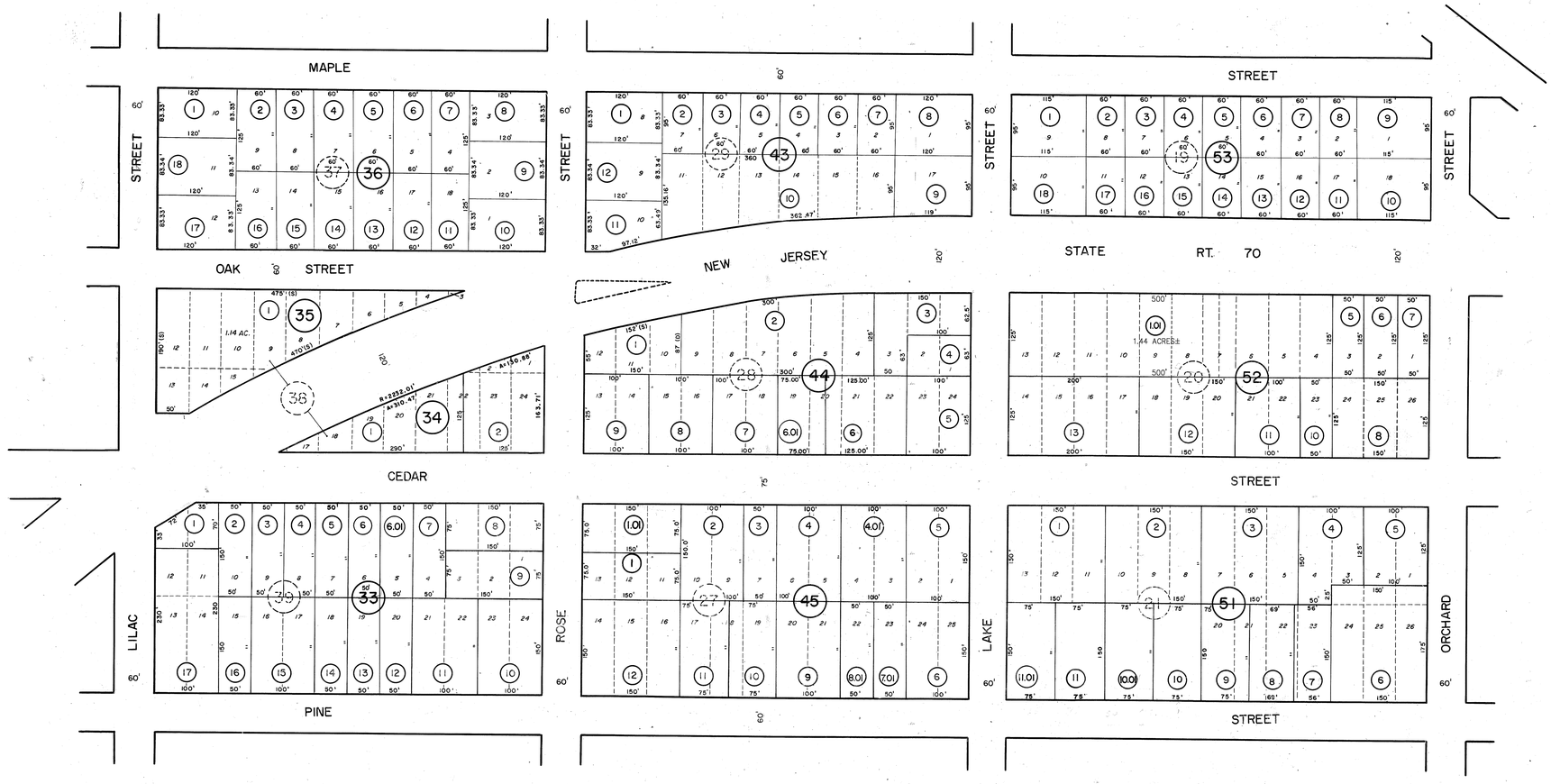

NEW JERSEY DEPARTMENT OF THE TREASURY
DIVISION OF TAXATION
PROPERTY ADMINISTRATION
APPROVED AS A TAX MAP PURSUANT TO THE AUTHORITY OF N.J.S.A. 54:4-23 & 54:4-24
FOR THE DIRECTOR, DIVISION OF TAXATION
C.T.A.
LOCAL ASSESSMENT COMPLIANCE
C.T.A.
ASSISTANT DIRECTOR, PROPERTY ADMINISTRATIVE
DATE DEC 27 2004 SERIAL NO. 853

NEW JERSEY DEPARTMENT OF THE TREASURY
DIVISION OF TAXATION
ENGINEERING & RAILROAD TAX BUREAU
APPROVED AS A TAX MAP PURSUANT TO THE PROVISIONS OF CHAPTER 175, LAWS OF 1913, ETC.
FOR THE DIRECTOR, DIVISION OF TAXATION
BY C. L. Barnes
STATE SUPERVISOR
DATE APR 20 1961 SERIAL NO. 315

TAX MAP
BOROUGH OF LAKEHURST
OCEAN COUNTY, NEW JERSEY
SCALE 1" = 100' JANUARY 1961

PREPARED BY
AMERICAN AIR SURVEYS, INC.
907 PENN AVENUE - PITTSBURGH, PA.
IN ASSOCIATION WITH
EDWARD B. VAN NOTE, L. S.
234 NASSAU STREET - PRINCETON, NEW JERSEY

LEGEND
(1) - BLOCK NUMBER
(3) - PARCEL NUMBER
(S) SCALED DIMENSION
(D)-DEED DIMENSION
D - DEVELOPMENT LOT NUMBER

REVISED NO CHANGE DEC. 1983
BOROUGH ENGINEER
GEORGE C. LISSENDEN, JR. P.E. & L.S. 12946

SHEET 6

REVISED TO SHOW CONDITIONS	
AS OF	BY
1-10-86	GEORGE C. LISSENDEN, JR., P.E. & L.S. NO.12946
12-31-87	GEORGE C. LISSENDEN JR., P.E. & L.S. Nº 12946
12-31-88	GEORGE C. LISSENDEN JR., P.E. & L.S. NO. 12946
10-1-89	MALCOLM J. ROBINSON JR., L.S. NO. 24625
12-1-92	CRAIG F. REMINGTON, L.S. NO. 23924
7-28-04	CRAIG F. REMINGTON, L.S. NO. 23924
11-8-04	CRAIG F. REMINGTON, L.S. NO. 23924

REVISED TO SHOW CONDITIONS	
AS OF	BY
1-10-86	GEORGE C. LISSENDEN, JR., P.E. & L.S. NO.12946
12 23 86	GEORGE C. LISSENDEN, JR, P.E. & L.S. NO.12946
12-31-87	GEORGE C. LISSENDEN JR., P.E. & L.S. №12946
12-31-88	GEORGE C. LISSENDEN JR., P.E. & L.S. NO. 12946
12-1-92	CRAIG F. REMINGTON, L.S. NO. 23924
12-27-96	JOHN W. MASSEY, L.S. NO. 27518
7-13-01	CRAIG F. REMINGTON, L.S. NO. 23924
12-31-03	*CRAIG F. REMINGTON, LS. NO.23924*
7-28-04	CRAIG F. REMINGTON, L.S. NO. 23924
11-8-04	CRAIG F. REMINGTON, L.S. NO. 23924
7-29-2011	CRAIG F. REMINGTON, L.S. NO. 23924
12-2-2015	CHARLES E. ADAMSON, L.S. NO. 42627
1-4-2018	CHARLES E. ADAMSON, L.S. NO. 42627

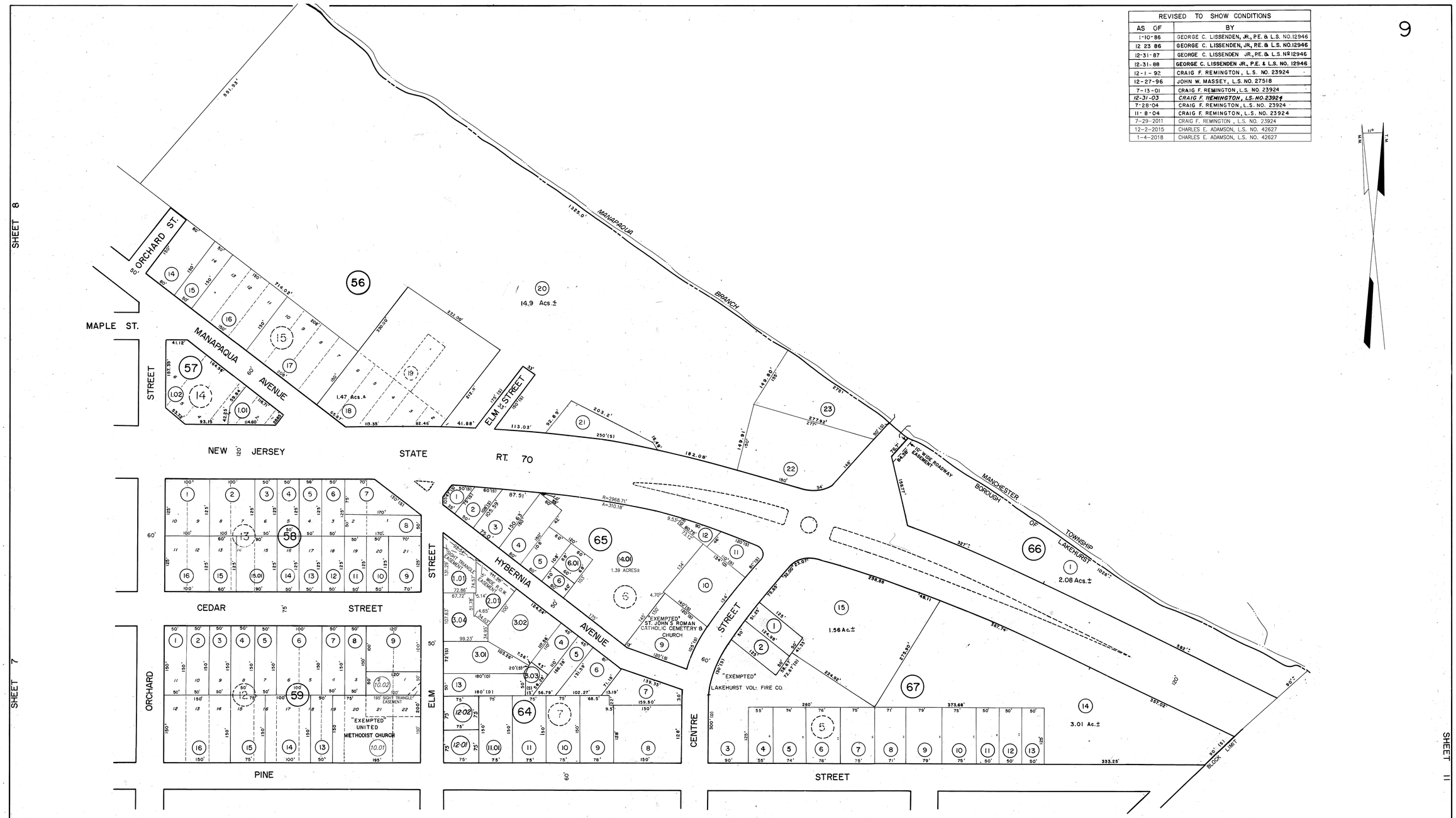

NEW JERSEY DEPARTMENT OF THE TREASURY
DIVISION OF TAXATION
PROPERTY ADMINISTRATION
APPROVED AS A TAX MAP PURSUANT TO THE AUTHORITY OF
N.J.S.A. 54:1-35 & 54:5-1
FOR THE DIRECTOR, DIVISION OF TAXATION
LOCAL LICENSING COMPLIANCE C.T.A.
MANAGER
LOCAL LICENSING COMPLIANCE C.T.A.
SANTO C. DONATO, JR. REVISING FIELD REPRESENTATIVE
DATE DEC 27 2004 SERIAL NO. 853

NEW JERSEY DEPARTMENT OF THE TREASURY
DIVISION OF TAXATION
ENGINEERING & RAILROAD TAX BUREAU
APPROVED AS A TAX MAP PURSUANT TO THE PROVISIONS OF CHAPTER 175, LAWS OF 1913, ETC.
FOR THE DIRECTOR, DIVISION OF TAXATION
BY C. Barnes
STATE SUPERVISOR
DATE APR 20 1961 SERIAL NO. 315

TAX MAP
BOROUGH OF LAKEHURST
OCEAN COUNTY, NEW JERSEY
SCALE 1" = 100' JANUARY 1961

PREPARED BY
AMERICAN AIR SURVEYS, INC.
907 PENN AVENUE - PITTSBURGH, PA.
IN ASSOCIATION WITH
EDWARD B. VAN NOTE, L.S.
234 NASSAU STREET - PRINCETON, NEW JERSEY

LEGEND
(1) - BLOCK NUMBER
(5) - PARCEL NUMBER
(S) SCALED DIMENSION
(D) - DEED DIMENSION
5 - DEVELOPMENT LOT NUMBER

REVISED NO CHANGE DEC. 1983
BOROUGH ENGINEER
GEORGE C. LISSENDEN, JR. P.E. & L.S. 12946

12-31-03 BLOCK 64 LOT 12 SUB. 12.01/12.02
7-13-01 BLOCK 65 LOT 3, DIMENSIONS

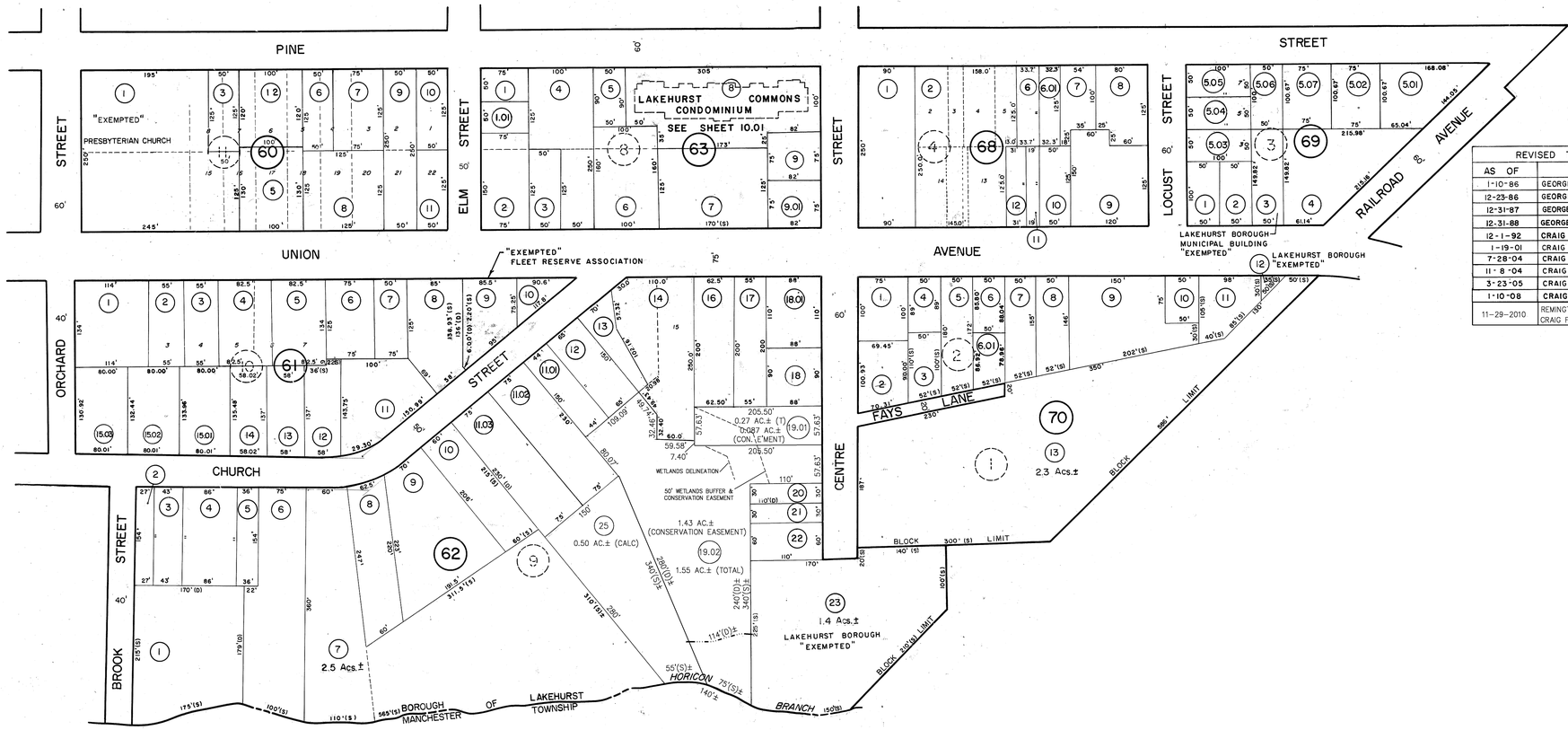

REVISED TO SHOW CONDITIONS	
AS OF	BY
1-10-86	GEORGE C. LISSENDEN, JR., P.E. & L.S. NO.12946
12-23-86	GEORGE C LISSENDEN, JR., P.E. & L.S. NO.12946
12-31-87	GEORGE C. LISSENDEN JR., P.E. & L.S. Nº 12946
12-31-88	GEORGE C. LISSENDEN JR., P.E. & L.S. NO. 12946
12-1-92	CRAIG F. REMINGTON, L. S. NO. 23924
1-19-01	CRAIG F. REMINGTON, L.S. NO. 23924
7-28-04	CRAIG F. REMINGTON, L.S. NO. 23924
11-8-04	CRAIG F. REMINGTON, L.S. NO. 23924
3-23-05	CRAIG F. REMINGTON, L.S. NO. 23924
1-10-08	CRAIG F. REMINGTON, L.S. NO. 23924
11-29-2010	REMINGTON & VERNICK ENGINEERS CRAIG F. REMINGTON L.S. NO. 23924

SHEET 6

SHEET 11

11-29-2010 BLOCK 62, LOT(S) 18 & 24 MINOR SUBDIVISION
1-10-08 BLOCK 61, LOT 9 (SURVEY), BLOCK 63, LOT 8 (LAKEHURST COMMONS)
3-23-05 BLOCK 61 LOT 9 "EXEMPTED"
7-28-04 BLOCK 62 LOTS 14 & 15 NEW LOT 14
8-19-01 BLOCK 62 LOT 3 (LAKEHURST COMMONS)
6-16-00 BLOCK 62 LOT 3 (LAKEHURST COMMONS) BY DEED
5-22-00 BLOCK 68 LOTS 2,3,4,5,13 & 14 - NEW LOT 2

NEW JERSEY DEPARTMENT OF THE TREASURY
DIVISION OF TAXATION
PROPERTY ADMINISTRATION
APPROVED AS A TAX MAP PURSUANT TO THE AUTHORITY OF
N.J.S.A. 54:1-40 & 54:26-1
FOR THE DIRECTOR, DIVISION OF TAXATION
C.T.A.
LOCAL ASSESSMENT COMPLIANCE
C.T.A.
DATED DEC 27 2004 SERIAL NO. 853

NEW JERSEY DEPARTMENT OF THE TREASURY
DIVISION OF TAXATION
ENGINEERING & RAILROAD TAX BUREAU
APPROVED AS A TAX MAP PURSUANT TO THE PROVISIONS OF CHAPTER 175, LAWS OF 1913, ETC.
FOR THE DIRECTOR, DIVISION OF TAXATION
BY C. Barnes
STATE SUPERVISOR
DATE APR 20 1961 SERIAL NO. 315

TAX MAP
BOROUGH OF LAKEHURST
OCEAN COUNTY, NEW JERSEY
SCALE 1" = 100' JANUARY 1961

PREPARED BY
AMERICAN AIR SURVEYS, INC.
907 PENN AVENUE-PITTSBURGH, PA.
IN ASSOCIATION WITH
EDWARD B. VAN NOTE, L. S.
234 NASSAU STREET-PRINCETON, NEW JERSEY

LEGEND
(1) - BLOCK NUMBER
(5) - PARCEL NUMBER
(S) SCALED DIMENSION
(D)-DEED DIMENSION
5 - DEVELOPMENT LOT NUMBER

REVISED NO CHANGE DEC. 1983
BOROUGH ENGINEER
GEORGE C. LISSENDEN, JR. P.E. & L.S. 12946

REVISIONS		
1-10-2008	CRAIG F. REMINGTON	23924

UNIT NO.	LOT NO.	AREA
B	C-01	1802 SF.
A	C-02	1512 SF.
A	C-03	1512 SF.
A	C-04	1512 SF.
D	C-05	1757 SF.
C	C-06	1879 SF.
C	C-07	1879 SF.
D	C-08	1757 SF.
A	C-09	1512 SF.
A	C-10	1512 SF.
A	C-11	1512 SF.
B	C-12	1802 SF.

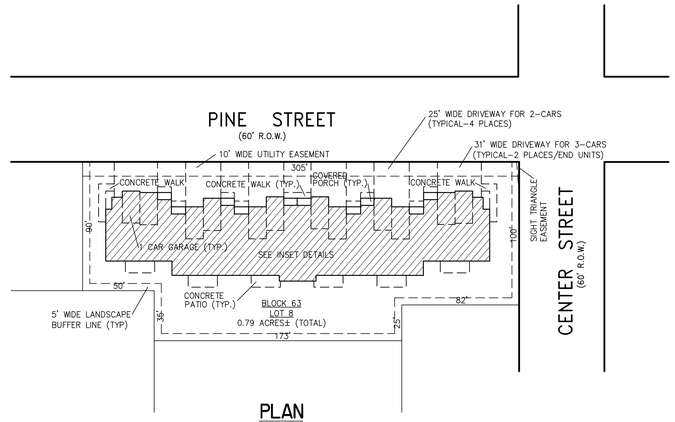

PLAN
SCALE: 1"=50'

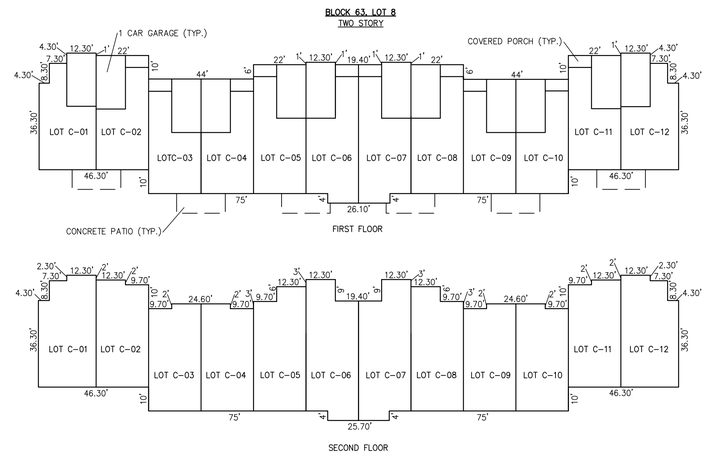

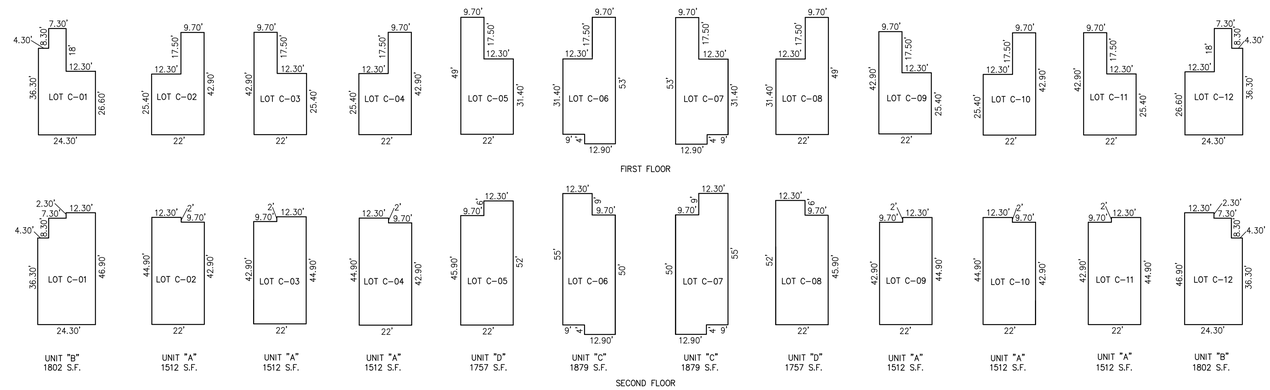

DETAILS
SCALE: 1"=30'

BLOCK 63, LOT 8
LAKEHURST COMMONS
114 CENTER STREET
INSET "A"

CONDOMINIUM DETAILS AND DIMENSIONS
BLOCK 63, LOT 8
SEE PLATE 10

TAX MAP
BOROUGH OF LAKEHURST

OCEAN COUNTY NEW JERSEY

SCALE: AS NOTED DATE: 12-20-2007

CRAIG F. REMINGTON LAND SURVEYOR LIC. NO. 23924

24 GA 28003300

REMINGTON, VERNICK & VENA ENGINEERS
9 ALLEN STREET, TOMS RIVER, N.J. 08753
(732) 286-9220, FAX (732) 505-8416
WEB SITE ADDRESS: WWW.RVE.COM

SHEET 9

REVISED TO SHOW CONDITIONS	
AS OF	BY
1-10-86	GEORGE C. LISSENDEN, JR., P.E. & L.S. NO.12946
12-23-86	GEORGE C. LISSENDEN, JR., P.E. & L.S. NO.12946
12-31-87	GEORGE C. LISSENDEN JR., P.E. & L.S. Nº 12946
12-31-88	GEORGE C. LISSENDEN JR., P.E. & L.S. NO. 12946
12-1-92	CRAIG F. REMINGTON, L.S. NO. 23924
12-27-96	JOHN W. MASSEY, L.S. NO. 27518
7-28-04	CRAIG F. REMINGTON, L.S. NO. 23924
11-8-04	CRAIG F. REMINGTON, L.S. NO. 23924
5-17-05	CRAIG F. REMINGTON, L.S. NO. 23924

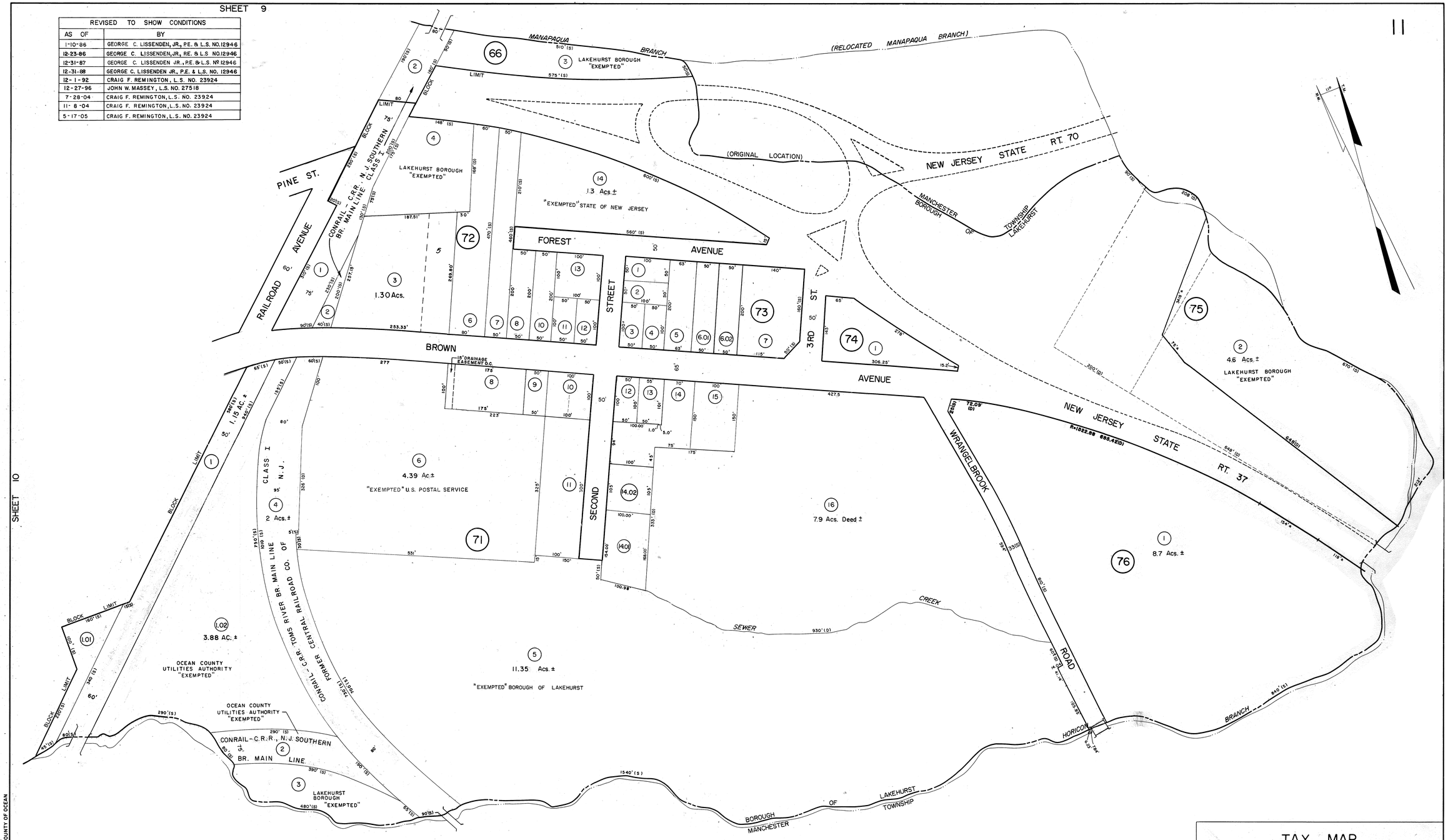

SHEET 10

5-17-05 BLOCK 71 LOT 14.02 MINOR SUBDIVISION
2-14-00 BLOCK 71 LOT 5 RIGHT OF WAY AQUIRED BY COUNTY OF OCEAN

NEW JERSEY DEPARTMENT OF THE TREASURY
DIVISION OF TAXATION
PROPERTY ADMINISTRATION
APPROVED AS A TAX MAP PURSUANT TO THE AUTHORITY OF
N.J.S.A. 54:4-23 & 54:4-2
FOR THE DIRECTOR, DIVISION OF TAXATION
CHARLES A. COLE, C.T.A. LOCAL PROPERTY COMPLIANCE
SAMUEL C. RUDALICA, C.T.A. FIELD SUPERVISOR
DATE DEC 27 2004 SERIAL NO. 85 5

NEW JERSEY DEPARTMENT OF THE TREASURY
DIVISION OF TAXATION
ENGINEERING & RAILROAD TAX BUREAU
APPROVED AS A TAX MAP PURSUANT TO THE PROVISIONS OF CHAPTER 175, LAWS OF 1913, ETC. FOR THE DIRECTOR, DIVISION OF TAXATION
BY C. Banner
STATE SUPERVISOR
DATE APR 20 1961 SERIAL NO. 815

TAX MAP
BOROUGH OF LAKEHURST
OCEAN COUNTY, NEW JERSEY
SCALE 1" = 100' JANUARY 1961

PREPARED BY
AMERICAN AIR SURVEYS, INC.
907 PENN AVENUE - PITTSBURGH, PA.
IN ASSOCIATION WITH
EDWARD B. VAN NOTE, L. S.
234 NASSAU STREET - PRINCETON, NEW JERSEY

LEGEND
(1) - BLOCK NUMBER
(3) - PARCEL NUMBER
(S) SCALED DIMENSION
(D) - DEED DIMENSION
5 - DEVELOPMENT LOT NUMBER

REVISED NO CHANGE DEC. 1983
BOROUGH ENGINEER
GEORGE C. LISSENDEN, JR. P.E. & L.S. 12946

11